USER INSTRUCTIONS

GB IE

Section	Contents	Page No.	Section	Contents	Page No.
1.0	Important Notes	1	7.0	Fuel Bed Layout - pebble effect	3
2.0	Clearances to Combustibles	1	7.1	Fuel Bed Layout - rounded coal effect	5
3.0	Fire Guards	2	8.0	Servicing	6
4.0	Ventilation	2	9.0	Cleaning	6
5.0	Operating the fire - Manual control	2	10.0	Replacing the batteries - Slide control models	6
5.1	Operating the fire - Slide control	3	11.0	List of replacement parts	7
6.0	Flue Spillage Monitoring System	3	12.0	Installation details	7
			13.0	Service History	8
			14.0	Guarantee - Terms and conditions	8

1.0 IMPORTANT NOTES

• The Installation and Servicing of this fire MUST only be carried out by a competent person in accordance with local Codes and/or Regulations, Building Regulations and the manufacturer's instructions. Failure to comply with these could lead to prosecution and invalidate the appliance warranty. In the event of gas leakage from the appliance, the gas supply must be turned off at the nearest isolating valve. This appliance is only suitable for the gas type for which it is supplied.
• Keep a note of the installer's name and address, the original purchase receipt and the date of installation. Failure to produce this information may invalidate the warranty. The appliance should be serviced regularly to ensure continued safe operation. See the servicing section for further reference. Frequency of service will depend on use, but MUST be carried out at least once annually.
• Parts of this appliance become naturally hot during use. It is recommended that a suitable fireguard is used, especially where young children, pets, the elderly or infirm are concerned. The manufacturer of this appliance considers all surfaces as working surfaces with the exception of the control knob and control panel.
• As with any gas fire, a fire guard complying with BS 8423 must be used in presence of pets, children, and the elderly or infirm.
• The appliance should be serviced regularly to ensure continued safe operation. Frequency of service will depend on use, but MUST be carried out at least once annually.
• Combustible items, such as flooring and furniture and soft wall coverings (such as blown vinyl or embossed paper), low temperature surrounds etc may discolour if fitted too close to the fire. See relevant section for further details on clearances to combustibles. No combustible materials or flooring should protrude onto the hearth.
• This appliance incorporates a combustion monitoring system (ODS).
• DO NOT burn any foreign material on this fire, the ceramic fuel effect components must be of the correct type and laid out in accordance with the relevant section of these instructions.
• Failure to do so could create a hazard or lead to sooting.
• Before the appliance is installed, the chimney should be swept. All flues should be checked by the installer to ensure there are no defects or obstructions that may prevent the flow of combustion products.
• This appliance is fitted with a flue blockage safety device which will shut down the fire if abnormal flue conditions occur. It is NOT a substitute for an independently mounted Carbon Monoxide detector.
• This fire is supplied with a particular style of firefront. Use of the firefront will ensure an adequate airflow under the firebed for the correct functioning of this appliance. Use ONLY the firefront supplied with the appliance. Use of any other firefront could be dangerous.
• Should any home improvements be carried out to the property after the fire is installed, such as installation of extractor fans for example, the fire should be re-checked by a competent person for safe operation.

2.0 CLEARANCES TO COMBUSTIBLES

A combustible shelf may be fixed to the wall above the fire, providing that it complies with the dimensions given below.

Maximum depth of shelf	*Minimum distance from finished hearth surface to underside of shelf*
100mm (4in)	745mm (29 1/4 in)
150mm (6in)	845mm (33 1/4 in)
203mm (8in)	895mm (35 1/4 in)

A non-combustible shelf may be fitted to within 10mm of the top edge of the fireplace opening. Combustible materials, such as wood, may be fitted to within 100mm of either side of the fireplace opening, providing the forward projection does not exceed 100mm.
Any combustible side walls must be at least 500mm to the side of the radiant heat source. As with all heating appliances, any decorations, soft furnishings, and wall coverings (i.e. flock, blown vinyl and embossed paper) positioned too close to the appliance may discolour or scorch.

© 2021 Pure Glow Limited

3.0 FIRE GUARDS

GB IE

The fireguards specified in BS 8423 are intended to protect people from falling into a fire, prevent burns and reduce the risk of injury, particularly to young children and the infirm. In addition it is intended to reduce the risk of fire resulting from clothing and/or other flammable materials coming into contact with, or in proximity to, burning fuel and/or hot surfaces.

Fireguards can be permanently fixed in position or can be moveable, and can incorporate open fires including combination grates, or closed fires, including room heaters and stoves. **See figures 1 & 2 for fireguard examples.**

The fireguards specified are not intended to reduce the risk of fires caused by flying particles, which are covered by BS 3248.

Figure 1
Example of moveable fireguard for portable heating appliances

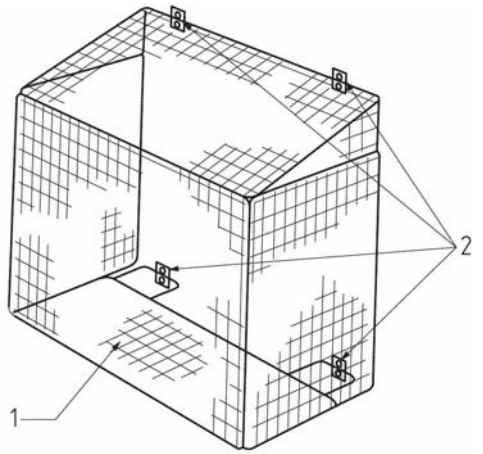

Key
1. Optional base section for total enclosure of a wall mounted appliance
2. Points for attachment to a wall.

Figure 2
Example of detachable fireguard

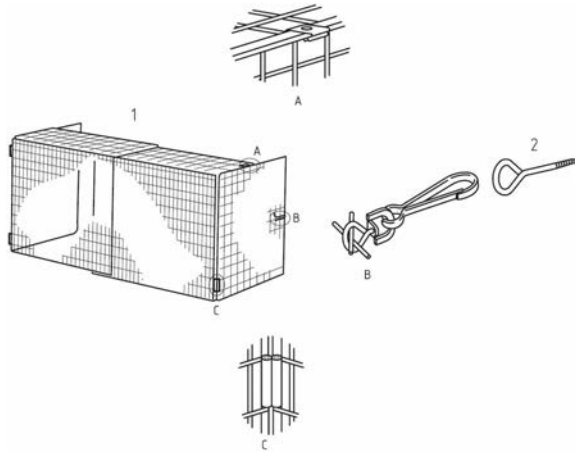

Key
1. Detachable fireguard
2. Screw eye

4.0 VENTILATION

No purpose provided ventilation is normally required for this appliance. The requirements of other appliances operating in the same space or room, and the results of a spillage test must be taken into consideration when assessing ventilation requirements, this will have been carried out by your registered installer. For Republic of Ireland, ventilation may be required, see IS 813, ICP3, IS 327, and any other rules in force.

WARNING : Ventilation openings (where fitted) must never be blocked or restricted in any way.

5.0 OPERATING THE FIRE - MANUAL CONTROL MODELS

The pilot is visible through the left hand side of ceramic fuel matrix. When cold, the coals or pebbles may be rotated for good viewing. The fire features a 'twin spark' ignition system to aid lighting, Push the control knob in fully and turn anti-clockwise through both of the SPARK positions, keeping fully depressed, hold there for a few seconds. If the fire has not been used for some time, hold the knob in this position for longer, to allow any air in the pipes to be purged.
Continue turning anti-clockwise through the spark clicks to the nine o'clock position, ensuring the pilot has lit. If not, return the knob clockwise, and repeat. When the pilot lights after one of the two sparks, keep the knob depressed in the nine o'clock position for approximately ten seconds. Now release the knob and the pilot should stay alight. If the pilot is extinguished during use, wait three minutes before repeating the ignition procedure.
To achieve the HIGH setting, push the control knob in slightly and continue turning anti-clockwise to the high position. The main burner should light after a few seconds. To decrease the setting to LOW, push the knob in slightly and turn the control knob clockwise to the low setting. To turn to the pilot only position from the HIGH or LOW positions, press the control knob in, and return to the nine o'clock position and release. To turn the fire OFF, keep the knob pressed in, return to the off position and release.

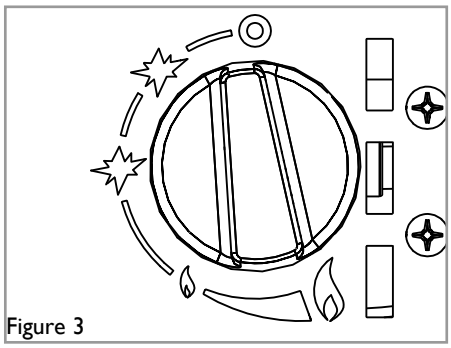

Figure 3

© 2021 Pure Glow Limited

5.1 OPERATING THE FIRE - SLIDE CONTROL MODELS

GB IE

The pilot is visible through the left hand side of the matrix. When cold, the coals or pebbles may be rotated for good viewing.

Push the slide control knob fully downwards to the SPARK position, and hold there for approximately ten seconds. Now release the knob and the pilot should stay alight. When the pilot light has established, move the slide control knob upwards to the LOW flame setting. If the pilot is extinguished during use, wait three minutes before repeating the ignition procedure. To achieve the HIGH setting, move the slide control knob upwards to the HIGH flame setting. The fire can also be set to operate anywhere between HIGH and LOW by moving the control knob to an intermediate position.

To turn the fire OFF, move the slide control knob upwards fully to the position marked 'O'.

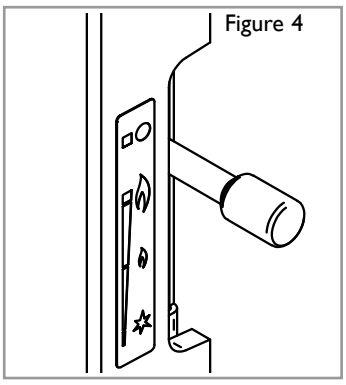
Figure 4

6.0 FLUE SPILLAGE MONITORING SYSTEM

This fire is fitted with a flue spillage safety device (ODS).

If the fire shuts down during use for no apparent reason then several reasons may be suspected. If a door or window has been opened creating a draught, then pilot disturbance could be the problem, and removal of the draught should resolve this.

The fire can then be re-lit in accordance with the previous section. If pilot disturbance is not the cause, then the ODS safety system may be in operation. Switch the appliance OFF, call in your installer to check any ventilation and carry out any remedial work required. DO NOT allow the appliance to be used until the installation is passed as safe.

7.0 FUEL BED LAYOUT - PEBBLE EFFECT

This fire is supplied with 15 ceramic pebbles. Lay the pebbles out and put the four largest to one side. The pebbles may vary slightly in size, shape and colour, in order to allow a realistic layout. Fit the tapered brick pad into the securing brackets in the upper area of the firebox. Place the large brick panel against the rear of the firebox.

Figure 6

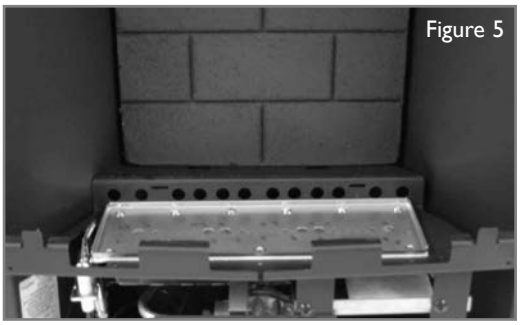
Figure 5

Place the ceramic combustion matrix onto the burner and the ceramic side cheeks onto the matrix.

Lay out the pebbles and put the 4 largest to one side. Place any six of the smaller pebbles on the front row of the matrix. Ensure the pebbles are firmly against the side cheeks as shown in the photograph. If necessary, pull the pebbles forward slightly to ensure their rear edges do not overhang the flame ports. The edges of the pebbles MUST NOT be allowed to enter the flame ports.

Figure 7

Figure 8

Figure 9

Place the middle row of four larger pebbles onto the supports in the matrix, over the top of the holes and partially on top of the front pebbles. Ensure the pebbles are not turned sideways, such that they actually enter the holes.

Place the middle row of four larger pebbles onto the supports in the matrix, over the top of the holes and partially on top of the front pebbles. Ensure the pebbles are not turned sideways, such that they actually enter the holes.

© 2021 Pure Glow Limited

7.0 FUEL BED LAYOUT - PEBBLE EFFECT - CONTINUED

GB IE

Place the rear row of five pebbles on the flat posts of the matrix and up against the middle row making sure there is a gap between them. It may be necessary to change the orientation of these by 90 degrees. Note: The pebbles must not be crammed together, or inserted into the holes in the matrix. A well laid out, generously spaced pebble layout will give the best results.

Figure 10

Make sure the flames travel through the pebbles and are not obstructed by them. No flames should hit the sides of the firebox

IMPORTANT : The fire is designed to operate correctly with the pebbles supplied when assembled according to the instructions. Never add to the fifteen pebbles, or change them for a different type. Never throw rubbish or other matter onto the fuel bed. Due to the light colour of the pebbles, some discolouration/sooting is to be expected during normal use.

7.1 FUEL BED LAYOUT - ROUNDED COAL EFFECT

This fire is supplied with 11 ceramic moulded coals.
Fit the tapered brick pad into the securing brackets in the upper area of the firebox. Place the large brick panel against the rear of the firebox.

Figure 11

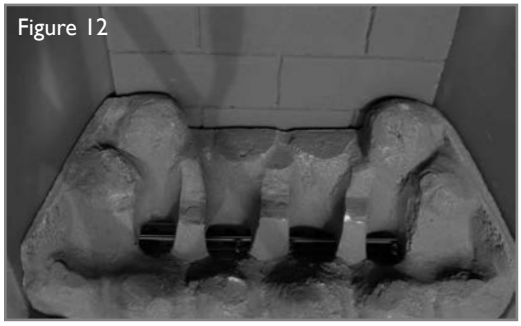
Figure 12

Place the ceramic combustion matrix onto the burner.

Lay out the coals and put the 4 largest to one side.
Place the front row of five smaller coals on to the matrix. Ensure that the coals are lined up with the port walls. The rear two smaller coals are to be position in the centre and pushed back. The edges of the coals MUST NOT be allowed to enter the flame ports.

Figure 13

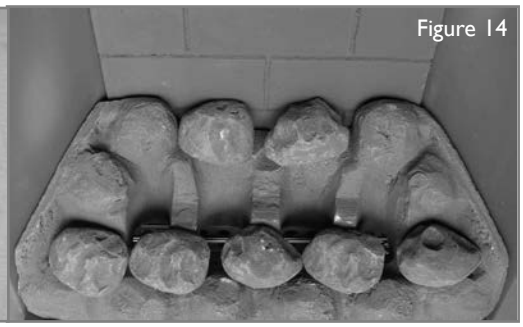
Figure 14

Figure 15

Place the middle row of four larger coals on top of the front row of coals and out the of the flame ports. Creating a flame gap behind the middle row of coals. Ensure the coals are not turned sideways, such that they actually enter the holes.

IMPORTANT : The fire is designed to operate correctly with the coals supplied when assembled according to the instructions. Never add to the eleven coals, or change them for a different type. Never throw rubbish or other matter onto the coal bed.

© 2021 Pure Glow Limited

8.0 SERVICING

The fire and flue should be checked on an annual basis to ensure all of the products of combustion are entering the flue and that there is no excessive build up of soot. The frequency of service will depend on usage, but MUST be carried out at least once annually. Servicing must be carried out by a GAS SAFE registered engineer.

9.0 CLEANING

Cleaning of the coals/pebbles may be carried out by following the instructions given in section 9.0 of these instructions. The Installation instructions carry full servicing details for the use of the installer.
If debris from the flue or other foreign matter is found on the fire it may indicate a need for servicing. Do not use the fire until the source of the debris has been found and rectified. Air vents (where fitted) should be checked periodically to ensure they are free from obstruction.
Before carrying out any of the following operations, ensure that the fire is OFF and completely cold.
FIREFRONT - Any dust accumulating in the firefront may be removed using a vacuum cleaner or dry cloth. Heavy stains may be removed by using a damp cloth and mild household detergent. Brass parts of the firefront may be cleaned using a suitable brass cleaner. Replace the front centrally against the fire after cleaning. Do not use a damp cloth to clean cast iron fronts (Soho, and Finsbury models) as this can cause the fronts to rust.
PAINTED AREAS - These can be cleaned using a dry cloth.
COALS AND CERAMICS - Remove the firefront and place to one side. Remove the ceramic components. Gently clean in the open air. Be careful not to create dust from the coals. Where necessary replace damaged components with genuine spares. Seal scrap components in plastic bags and dispose of at proper refuse sites as directed.
Re-fit the ceramics carefully by referring to section 7.0 of these instructions.

10.0 REPLACING THE BATTERIES (SLIDE CONTROL VERSIONS)

Slide control models
Ensure appliance is off and cool. The battery is located in the front of the ignition unit, on the right hand side of the burner (shown in figure 16). Unscrew the battery holder cap. Insert 1 x 'AA' (1.5 volt) battery. Replace cap.

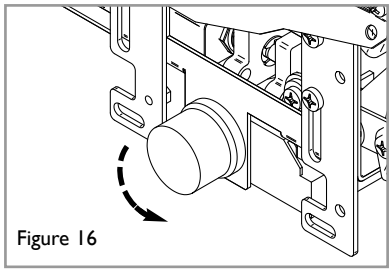
Figure 16

© 2021 Pure Glow Limited

11.0 LIST OF REPLACEMENT PARTS

GB IE

Item	Part number
Pack of 15 Pebbles	F550057
Pack of 11 Moulded coals	F550059
Ceramic fuel bed - Pebble models	F780035
Ceramic fuel bed - Moulded coal models	F780034
Rear ceramic tile and rear taper pad - Hotbox models	F550208
Rear ceramic tile - Convector models	F790005
Oxypilot 9090 - Manual, remote control & slide control models	F730057
Oxypilot 21100 - Manual, remote control & slide control models	F730108
Gas valve - Manual control models	F730085
Gas valve - Slide control models	F730067
Injector - Stereo 78 - Manual & Slide control models	F730062
Burner assembly - complete - Manual control	TRAYSLIM
Burner assembly - complete - Slide control	TRAY153

12.0 INSTALLATION DETAILS

Name & contact details of installer :	Supplied by :
Installer GAS SAFE registration No :	Model :
Fire serial No. :	Date installed :

© 2021 Pure Glow Limited

13.0 SERVICE HISTORY

GB IE

Date of service	Serviced by (name):	GAS SAFE No. :	Contact details of Engineer

14.0 GUARANTEE - TERMS AND CONDITIONS

Registration is not required.
Appliances purchased prior to 1st February 2009, and those specifically marked as '1 year guarantee' on this website, are guaranteed for one year from the date of purchase, provided that the following three terms and conditions are adhered to:
1. For any claim to be made within 1 year from date of purchase you will be required to provide and supply us with your original proof of purchase.
2. Your gas fire must have been commissioned by Gas Safe registered installer, evidence of which you must provide together with the registration number.
3. All appliances must have been installed and operated in accordance with the manufacturer's instructions.

3 Year Guarantee Terms and Conditions
Please be advised that the 3 year guarantee only covers products purchased on or after 1st February 2009.
The 3 year guarantee is only applicable to purchases made through an authorised stockist/retailer. Please see our website for a list of authorised stockists. Any purchase(s) made through an unauthorised stockist(s) will be eligible for a statutory 1 year guarantee.
For all gas fires purchased the 3 year guarantee commences from the date of purchase, provided that the following 4 terms and conditions are adhered to:
1. For any claim to be made within the 3 years from date of purchase you will be required to provide and supply us with your original proof of purchase.
2. Your gas fire must have been commissioned by Gas Safe registered installer, evidence of which you must provide together with the registration number.
3. Your appliance must have been serviced annually by Gas Safe registered installer, evidence of which must be provided, such as the receipt.
4. Purchase(s) must be made through an authorised stockist/retailer.

Please note all consumable items such as any ceramics including; coals, pebbles, the matrix, front strips, side cheeks, rear panels and tapered rear panels are not covered by the 3 year guarantee.
During the guarantee period any product or component which is proved to be faulty or defective in manufacture, will be repaired or replaced free of material and labour charges, providing that we have authorised or carried out the repair or replacement.
We will not accept or reimburse the costs of any third party who undertakes any work carried on the product or fits parts, unless we have approved such work in advance of it being carried out.
The guarantee period will not be extended even if we repair or replace any product or part.
For all electric fires purchased the 3 year guarantee commences from the date of purchase, providing that you can supply the proof of purchase. This does not cover consumable items such as pebbles, coals or light bulbs. Purchase(s) must be made through an authorised stockist.
Making a claim
Making a claim is easy. If you wish to make a claim under our guarantee and all the terms and conditions for your product have been met then please submit the following information for the attention of the 3G Service Department to the address below. Alternatively, you can email or fax.
PureGlow Ltd, The Coach House, Aston, Stone, Staffordshire, ST15 0BJ
Email: info@pureglowltd.co.uk
Tel: 01384 893060
Fax. 01384 897728
Details required:

1. Name, full address including postal code and contact telephone number.
2. A copy of your proof of purchase e.g. receipt or bank statement.
3. Original installers Gas Safe registration number (gas fires only).
4. Annual service receipt for every 12 months (gas fires only).

Please note that this does not affect your statutory rights.

This product complies with conformity requirements of the applicable European Regulations or Directives.

This product complies with conformity requirements of the applicable UK Regulations.

F860288

As our policy is one of continuous improvement and development , we hope therefore you will understand we must retain the right to amend details and/or specifications without prior notice.

© 2021 Pure Glow Limited